JUNE, 1978
VOL. 24 — NO. 2
Fifty Cents

Precision SHOOTING

a magazine for shooters by shooters

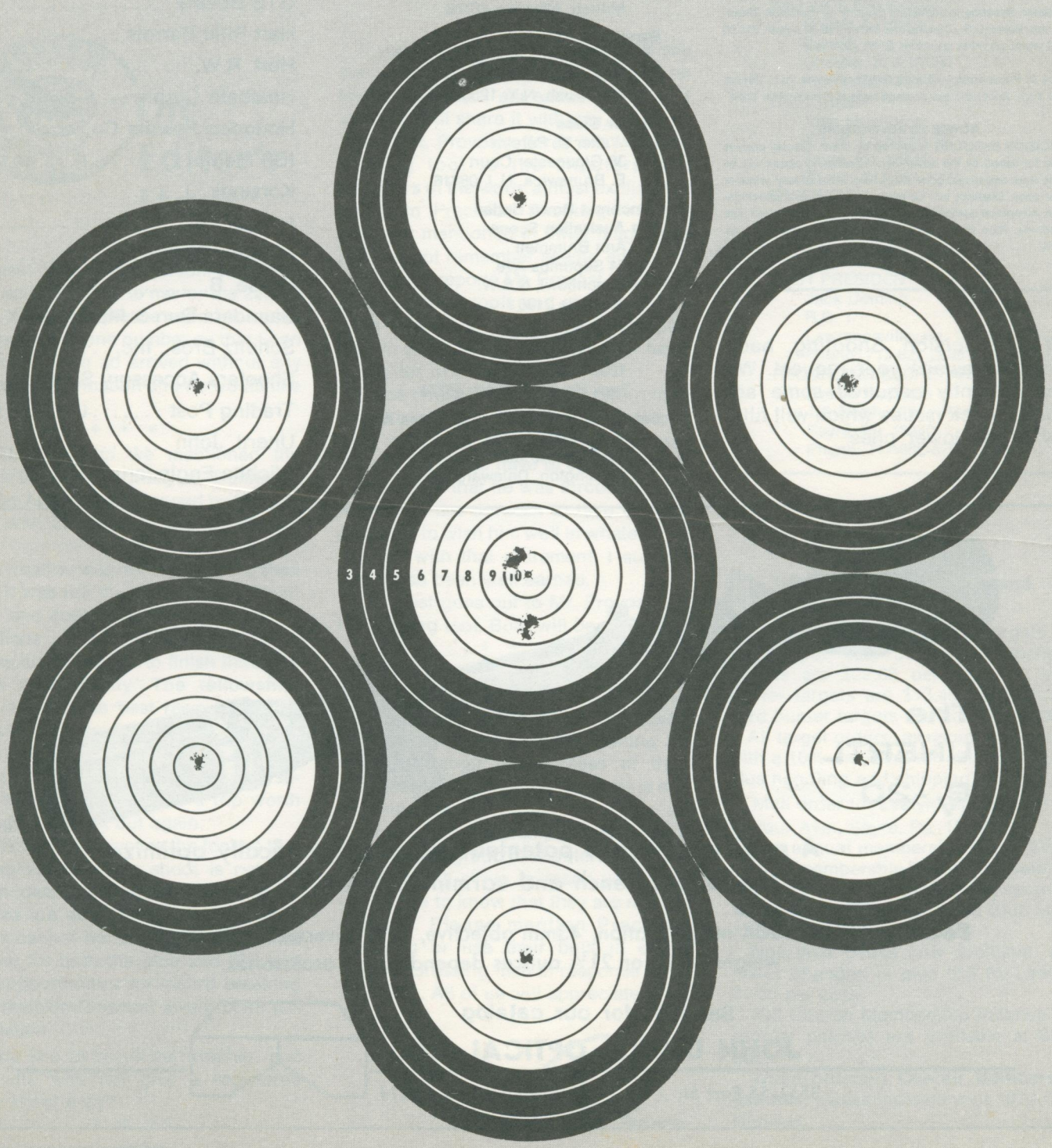

PRECISION SHOOTING

PUBLISHED MONTHLY BY PRECISION SHOOTING, INC.

Editorial and business offices at
Box 6
Athens, Pa. 18810
Tel. 717-888-7801

Editor — Ritchie Moorhead
President — A. H. Garcelon
Vice-President — Dermot C. Reilly
Treasurer — Ritchie Moorhead
Corp. Clerk — George J. Stannard, Jr.

Precision Shooting is published monthly by Precision Shooting, Inc. Rates: U.S., Canada and Mexico $6.00 a year; $11.00 for 2 years; all other countries $7.00 each year.

Place of Publication — Elmira Quality Printers, Inc., Elmira, New York. Second-class postage paid at Elmira, New York.

NOTICE TO ADVERTISERS

PRECISION SHOOTING is printed by offset. Display copy is to be furnished by the advertiser. Advertising plates will be made from negatives, good black and white glossy prints or clear copy. Displays will be made to Advertiser's specifications. All normal composition will be set according to our own standards. Rate cards will be mailed to Advertisers on request.

The Precision Shooting back issue file awaits your request. We have recently acquired some additional back issues which will fill a few of the lower piles.

PS STAFF

PRESIDENT
Dr. A. H. Garcelon
133 State St.
Augusta, Maine 04330

EDITOR
Ritchie Moorhead
Box 6
Athens, Pa. 18810

COLUMNISTS:

Technical Editor
M. H. Walker
R.D. 1, Warren Road
Mohawk, N.Y. 13407

Single Shot Rifles
Claude E. Roderick
509 Fifth Street
Monett, Missouri 65708

Benchrest - Feature
Lt. Col. Rick Hornbeck
R.D. 2, Box 220
Pine Bush, N.Y. 12566

Hunter Class
Walter D. Pereira
38 Gloucester Court
E. Brunswick, N.J. 08816

Benchrest Down Under
The Australian Scene
Ann Brummell
24 Septimus Ave.
Punchbowl, N.S.W.
Australia 2196

From The Workbench
Fred Sinclair
1200 Asbury Drive
New Haven, Indiana 46774

Benchrest Headlines — 25 Years Ago
A. H. Angerman
2528 Deepwood Drive
Wilmington, Delaware 19810

Advertisers Index

Bonanza Sports Mfg. Co. 7
B-Square 6
Culver, H., Conversions 11
Custom Bullets 8
Custom Products 13
Davidson, A. 9
Douglas Barrels 9
Fajen, Reinhart 8
Freeland's Scope Stands 5
GTB Bullets 11
Hart Rifle Barrels 15
Hart, R.W. 15
Heatbath Corp. 8
Hodgdon Powder Co. 14
IBS Memo 3
Korzinek, J. 11
Longo, Ed. 14
Masker, Seely 13
Pease, B. 8
Saunders Gun & Machine 9
Schultz Bros., Inc. 10
Shooters Accessory Supply 13
Trading Post 13
Unertl, John 2
Wichita Engineering 4

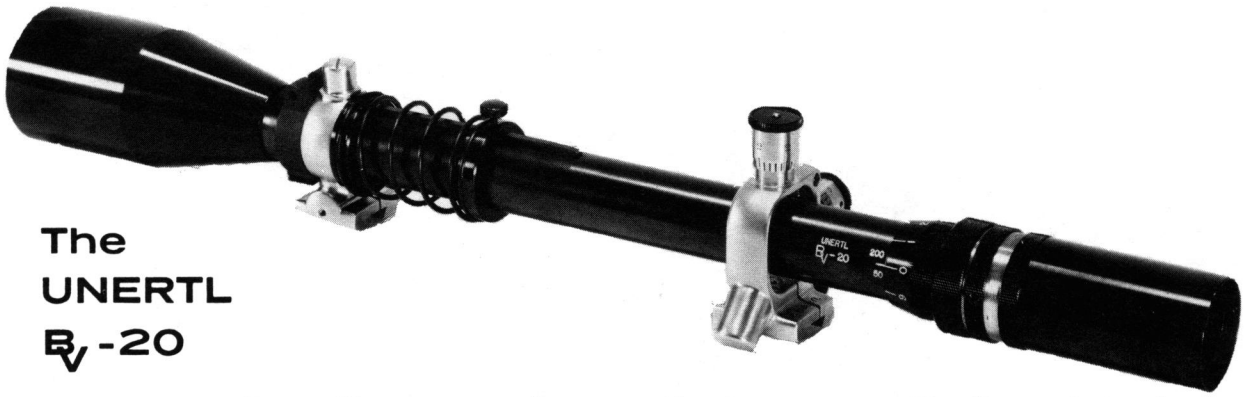

The UNERTL BV-20

A really new and patented telescope specifically optimized for the serious bench and varmint shooter.

Features . . . 20X magnification, 43mm objective, 17⅞" overall length and weight of 19 or 21¼ ounces depending on accessories.

Send $1 for our catalog

JOHN UNERTL OPTICAL CO.

3551-55 East St. Pittsburgh, Pa. 15214

President's Message

At the 1978 Winter Meeting it was decided to hold the next meeting in the early part of November in 1978. This was done due to the recent bad weather.

Since the meeting date has been changed we will need to have your agenda items much earlier this year. We are required to print these agenda items in Precision Shooting for the 3 months preceeding the meeting.

With that in mind I must have your agenda items in my hands by July 15 so that they can be compiled and sent to the printer by August 1, 1978.

Agenda items form the basis for the meeting. Without your ideas as agenda items we are unable to act on them. Jot down your items and send them along to me.

Since the date has been moved to warmer weather we are hopefull that more of you will be in attendance. Plan now to attend and enjoy the meeting.

Sincerely,
Wally Hart

"The Editor's Hour"

Please! Would the person who sent the Trading Post ad to me for the 223-35 and 6 X 47 rifles please send his name, address and phone number so that I can run the ad. The ad arrived without any necessary information and we would like to run it for you.

* * *

Some time ago we mentioned the registered winter activity at Dunham's Bay. On April 9th we stopped by there to shoot with the gang. It was a pleasant visit.

The weather was not the best; but then again it was not the worst either. Clear, windy and cool would kindly cover the conditions.

I was lucky enough to finish third and win a nice trophy. The fellowship, however, was the best reward. After a long winter it was nice to see some more of the gang again.

The food was good and the conversations were friendly. It was a trip worth making just to get out again.

All indications give me the feeling that the registered winter shoot is not too bad an idea. If the range is equipped for it, some are not, and desires the extra work it cannot be bad. It provides extra revenue for both the club and IBS and offers opportunities for record breaking and Precision Rifleman award point accumulation.

If you like to brave the weather, and many do, why not give a registered winter shoot a try?

* * *

If you are a careful reader of our ads you will note that the Gun Clinic ad is no longer with us. I am saddened by that loss and will share it with you.

Mr. C.R. Provost offered his excellent priming tool to the shooters and reloaders of the world almost exclusively by ad in Precision Shooting. I recall seeing it mentioned in other magazines but can not remember seeing an ad.

From his reports Mr. Provost has made many of these tools and sold them in a wide variety of places. They are outstanding for rapid repriming of large quantities of cases.

Some time ago we received word from Mr. Provost that he was being forced into retirement by his doctor. Consequently he would have to cancel the ad.

We regret that he was forced into the retirement but do want to take this opportunity to wish him well in whatever he may do with that retirement. I suspect that it has been well earned.

Our best goes out to Mr. Provost and his priming tool. Both will be missed.

* * *

While mentioning advertisements in Precision Shooting may we suggest that you mention us when contacting advertisers. They are constantly looking for ways to gauge the success of their efforts. Reaching specific markets is one of their aims.

Since our readership consists of a rather select group of shooters many advertisers will strive to reach you. They would like to know that they are making contact. Please mention Precision Shooting or use their built in codes when addressing mail in response to an ad in P.S. All of us will appreciate it.

INTERNATIONAL BENCHREST SHOOTERS

IBS OFFICERS

PRESIDENT
Wallace E. Hart
Montgomery St.
Nescopeck, Pa. 18635
Phone: 717-752-3481 Days
717-752-3776 Evenings

VICE PRESIDENT and MATCH SCHEDULE CHMN.
James Stekl
R.D. 1, Robinson Road
Mohawk, N.Y. 13407
Phone: 315-866-1769

2ND VICE PRESIDENT
Robert A. White
Box 58
Chester, N.J. 07930
Phone: 201-879-6122

TREASURER
John Moulthrop
804 W. Lockhart St.
Sayre, Pa. 18840
Phone: 717-885-1221

SECRETARY
Charles Fountaine
R.D. 2
Fort Ann, N.Y. 12827

PAST PRESIDENT
Jack Deming
R.D. 1
Lawrenceville, Pa. 16929
Phone: 717-827-2888

RECORDING SECRETARY
Evelyn Richards
411 North Wilbur Ave.
Sayre, Pa. 18840
Phone: 717-882-5795

IBS Memo

IBS Targets — Charter and Life Members

100 or 200 yard benchrest targets are $20.99 per 500. 300 yard benchrest targets are $22.08 per 500. 100 yard hunter targets are $13.48 per 250. 200 yard hunter targets are $15.39 per 250.

All target orders, as usual, are figured with a 10% discount for affiliated clubs, plus handling and shipping charges.

Mail order to: Evelyn Richards, 411 N. Wilbur Ave., Sayre, Pa. 18840.

The annual membership fee is $10.00 — Life membership in IBS has been set at $125. Apply to the recording secretary for enrollment. IBS Affiliated Club Membership $10.00.

New rule books now available, with minor changes — plus IBS By-Laws at $1.00 per copy.

IBS Charter Membership Patches and regular patches are available at $2.00 each.

When ordering **Charter Membership patches,** please indicate your 1970 Card Number.

Benchrest Feature

by Lt. Col. Rick Hornbeck
R.D. 2, Box 220
Pine Bush, New York 12566

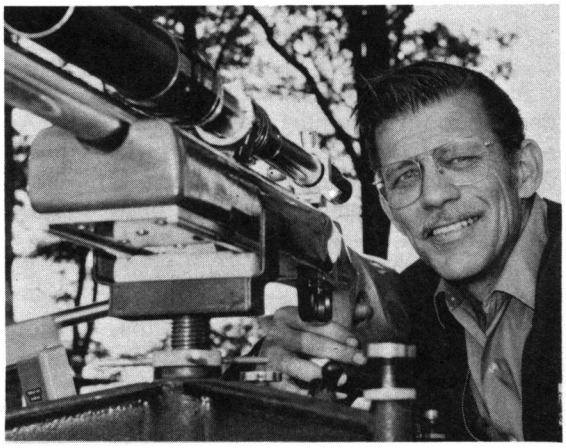

BASIC RELOADING GUIDE (Part 1)

Our Editor, Ritchie Moorhead, and I had a talk about all those potential benchrest competitors who really want to get a rifle and reloading equipment together and start taking part in benchrest matches. The major hold-up may be the initial cost. When we start adding up the totals for the rifle, and all the additional items, it turns into quite a ball of wax.

The handloader or marksman who gets the benchrest fever finds himself somewhat hung up on all the fancy reloading tools and equipment found in use at registered matches. I have run into this among folks who are about to make the big jump and have a rifle put together. Very often they give the reloading equipment almost as much attention as they do the rifle because they are convinced that without the custom hand dies, bullet spinners, cartridge spinners and other fancy stuff they haven't the ability to do very well. This simply is not so!

The vast majority of these people are handloaders and have a good selection of what we might call conventional reloading tools and dies. They have at least 90% of the equipment on hand to get the job done. The reloading press can be used on the range by being held down on a reloading bench with a "C" clamp. They have dies. If a set of dies has a full length resizing die the seating die can be used and a neck sizing die can be had from RCBS, Redding, Bonanza or Lyman. These dies will do the job required.

Then we have the other fancy tools that we talk about in these pages. They are nice to have to check the components and finished reloads. All have their place in due time. The really important thing is to get the ammo reloaded and get to the bench. At the bench is the only place where the competitor can become a top performer. It may come as a surprise to some but a number of our very best competitors break the seal on a box of bullets, open it and load them without any checks whatsoever. I have never seen P.J. Hart check bullet one. If you can beat him you are not doing very much wrong during reloading or shooting.

The only shortcoming of a reloading press, in my view, is the priming method used by most. The so called universal priming arm used in the presses will get the primer seated. The problem is that the press has been designed to full length resize cases with great ease, regardless of size, with the very minimum of operating handle pressure. This advantage results in too much pressure being applied on the primer punch when done in the press. You simply can't feel the primer bottom out until a bit more pressure than is desireable has been applied.

A simple and most satisfactory way to correct this situation is to drop by your dealer and pick up a Lee priming tool for a few bucks. This primer tool is hand operated and very widely used by benchrest competitors (see P.S., Sept. '77, "A Primer Seating Survey"). If a Lyman 310 hand tool is on hand, the priming die can be installed and it will also do a perfect job. With just a little attention during the priming operation of reloading the primer can be felt bottoming out with perfect results.

The Lyman 310 tool and die set can be used for benchrest reloading and, although a little slower than custom dies, will turn out a perfect reload.

Another tool set that has everything needed is the Target Model Reloading Kit made by Lee for about thirty bucks. It

WICHITA'S SUPERIOR BENCHREST ACTIONS

THE WICHITA MINI-ACTION
Perfect for the 10½ pound classes
- Receiver 1.375" in dia. - 5.5" long
- Shell holder bolt face
- 1 lb. 13 oz.

$180.00 plus postage

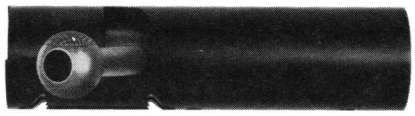

THE WICHITA WBR 1375
- Receiver 1.375" in dia. — 8.5" long
- Phosphor bronze extractor
- 2 lb. 10 oz.
- Opposite-side ports available in right hand or left hand model 1375's

$250.00 plus postage

Both actions finished in non-glare satin black. Bolts feature 3 locking lug-design. Suitable for Canjar or Remington triggers. Barrel thread size - 1" 16 NF - 3 X 1" deep.

A Pair of Precision Rifle Rests
Cast aluminum and steel . . . 6 lbs **$39.95**
Cast iron and steel . . . 11 lbs **$49.95**

For more information, see your local dealer, or write Wichita

Wichita also offers Return to Battery Rests for "BIG GUNS"

WICHITA ENGINEERING & SUPPLY INC.
DEPT. PS 5 P.O. BOX 11371 WICHITA, KANSAS 67211 PHONE (316) 265-0661

even includes a neck reamer that does a good job. I know of one benchrest competitor who has never used anything else and gets nice little groups.

The tools listed above are made for all standard cartridges. It's interesting to note that Paul Kempfer has modified the 310 Lyman tool for his own use and it works perfectly.

When planning a rifle, and reloading tools, with the price of this kind is considered, one often gets to thinking about taking a few shortcuts in the rifle to save enough money for some of the fancy accessories.

Perhaps it looks like enough can be saved for some items by buying a barrel, for example, that costs less than the current one hundred dollars or so for a top quality tube. Don't do it.

The reason that the match custom barrel costs what it does is that the barrel maker has to really bust his chops to turn out the quality we are blessed with today.

He can make them cheaper with some shortcuts, but you wouldn't buy many barrels from him. The same can be said for scopes. What you see is what you get! Don't plan on shortcuts in the rifle. Get the very best you can find.

Another situation often comes up. Your local gunsmith who has done a fine job on rifles for you may offer to put your benchrest rifle together for somewhat less money than the gents who are currently doing benchrest work. Unless your local boy is right up to date on actions, barrels, stocks, bedding methods and procedures currently necessary for top performance you might end up with something other than what you had in mind.

This is not intended as a dig at gunsmiths. I'm saying that this kind of rifle is very specialized and different for the gunsmith who is not daily involved with this equipment.

For example: If he kicks you through the door without first opening it at any mention of fiberglass stocks or sleeved actions he simply isn't up with what's going on in the game. The gent can put a hunting rifle together that has no shortcomings and is perfect. He's worth his weight in gold because of his day-today trade. The same can be said for a number of other forms of rifles and handguns that are required for other forms of shooting competition.

Those of us who write in these pages receive requests by mail or phone asking who they should contact to have a rifle built. We will give the name and addresses of men we know build benchrest rifles that are capable and have produced winning equipment. You make contact and work the rifle and terms out with them. Make sure you understand what it will cost, when you pay what and how long a wait you may have.

When your rifle is complete pay your bill. We have lost several good gunsmiths because competitors have been slow to pay up, which hurts everyone else. I can say it no other way: if you can't stand the heat — get away from the fire. I know not one single rich, well-to-do, gunsmith.

Put your money into a top rifle first. Then look around your reloading bench and see what you have that will reload match ammo. A press with a "C" clamp for hold down, a neck sizing die, a hand priming tool, powder measure (and scale to set it with) and a seating die. With your new rifle and scope, you are ready for the first match.

Next month we will take this minimum equipment and work up a good performing load for our new rifle and get the maximum accuracy it has built in.

FOR THE SHOOTER BY A SHOOTER

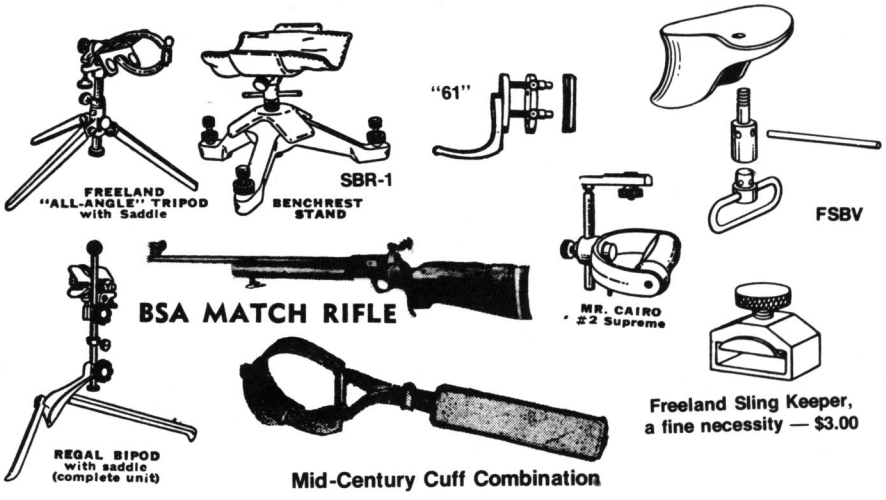

BSA-ISU STD. .22 LR RIFLE
R or L Hand: Supreme Quality $498.00
BSA-MARK-V HB 22 LR RIFLE
R or L Hand: Supreme Accuracy $532.00

FREELAND CANVAS RIFLE CASE FOR RIFLE W/SCOPE 46" or 50" $38.50

FSA fore-end stop, mention rifle	$ 8.00
FSBV JUMBO fore-end stop w/QD swivel & stud, mention gun	19.50
No. 184 DeLuxe Cuff & QD Hook, give arm circumference RH	13.00
No. 186 MIDCENTURY CUFF COMBINATION R or L hand	19.25
No. 6400-A 1 1/4" Sling/Cuff Set	23.35
Hard Leather Stand/Scope Case	59.00
KNOBLOCK Rifle or Pistol Shooting frame	49.85
No. 1 STANDARD "MR. CAIRO" Palm Rest	26.75
No. 2 SUPREME "MR. CAIRO" Palm Rest, versatile & comfortable	61.50
No. 61-9 INTERNATIONAL BUTT PLATE ASSEMBLY complete	93.00
FREELAND Foam padded glove FO-1	13.00
FREELAND "AR" fine shooting mat 70" Long	48.00
MARK TIME Pistol Timer	12.00
FREELAND AAT ALL ANGLE TRIPOD, Gray	34.00
FREELAND OB BIPOD, Gray saddle or lug	38.00
FREELAND REGAL BIPOD, Gray w/12" extension RSB-12	40.00
FREELAND VARMINT RIFLE SUPPORT	19.00
FREELAND INTERNATIONAL TEAM STAND	127.85
MERIT MASTER TARGET DISC	30.00

HAWKEYE BLACK LEATHER STD. NRA Rifle Coat No. 100 ..... $209.00
HAWKEYE BLACK LEATHER ISU Rifle Coat No. 200 ..... $190.00

FREELAND DEWAR BLOCK $8.25

PACHMAYR 5 Gun Pistol Kit, with lock grip tray & back door. Blk or Brown	84.00
FREELAND TUBE REAR TARGET SIGHT (Base $5.00)	80.00
(Adaptor base for Tube rear) from	8.00
STANDARD LOADING DIES from	17.50
19" Olive KIT STOOL w/pockets	15.50
B & L Gray or Green SHOOTING GLASSES	44.00
WEAVER "QWIK" POINT" mention gun	44.95
SBR-1 STD. BENCH REST STAND W/sand bags	32.50
SUPBR SUPREME BENCH REST STAND w/sand bags	40.00
FREELAND GUN TRUNK, state rifle	75.00
FREELAND ROD GUIDE of R or C fire	9.00
FREELAND ROD GUIDE for Anschutz	10.50
PAS-750 Trigger Pull Gauge NRA	29.00
10-AS Ear Protectors (Muffs)	16.70
Camp Perry Checkering Set 16-18 or 20 line	25.00
FREELAND KNEELING ROLL	12.00
RCBS Jr. Press, Special	59.95
MICRO Pistol Sight Set, Std.	22.00
3-302 2 1/2" Reflector carbide lamp	10.10
No. 200 1 1/4" RIFLE SLING	7.85
SENTRY SPOTTING SCOPE	113.50

JOBBING GUNS, RELOADING NEEDS, HUNTING TARGET & SPOTTING SCOPES, ALL TARGET ACCESSORIES, AMMO, SHOOTING CLOTHING, SIGHTS, ETC. WRITE US

Prices and Descriptions subject to change without notice — ADD FOR DELIVERY, PLEASE

FREELAND PAMPHLET Free — Send $1.25 for General Catalogue

GUNS AND AMMO ARE IN NOW—SO REPLACE YOUR STOCK THROUGH US.

FREELAND'S SCOPE STANDS, INC.

Al Freeland, Nationally Known Rifleman & NRA Member

3737 14th Ave. **ROCK ISLAND, ILL. 61201**

From The Workbench

by Fred Sinclair

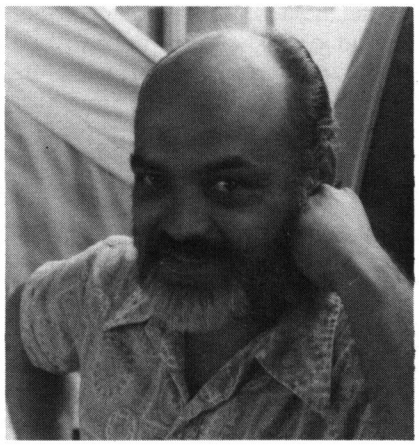

Please direct all questions to:
Precision Shooting "Workbench," Box 6, Athens, Pa. 18810
No individual answers will be given to workbench questions.

No mail reached my desk to answer this month so I thought I might bend your ears with my two cents in regard to all the lip service being given to "short stubby cases".

Ever since the introduction of the PPC case by Dr. Palmisano and Ferris Pindell I've been hearing negative outcrys regarding the bastard and/or odd ball head size, the weakness of the semi-balloon case and the difficulty in obtaining brass.

Now I am hearing and reading about how it isn't anything new and that it's all been tried before "blah", "blah", "blah".

For some reason there always are several people around who insist in "bad mouthing" something they know little about.

Quite honestly I was somewhat skeptical, in the beginning, but went ahead and built two rifles in the 6mm version.

After my wife and I shot these rifles in several matches my skepticism vanished.

I've had the good fortune to know Ferris and Dr. Palmisano for some time now and during this period I don't recall that either gentleman referred to the PPC as a "new" design, or theory, in cartridge shapes. I've heard no claims, by these men, that they were geniuses who invented something new.

Dr. Palmisano will tell you that he studied and worked with many predesigned cases before the final version of the PPC.

They aren't claiming to have all the answers, their only claim is that through the combination of the short powder column, small primer and small flashhole, they have one hell of a consistently accurate cartridge.

No big deal! just simply that!

Anyone who will dispute that is just plain "working with some loose shingles".

The PPC has been damned for having another standard head size.

Who's to say what's standard?

The -06 head size hasn't always been a standard! I would imagine Remington raised a few eyebrows when they produced the 222.

If Remington would have listened to all the negative comments regarding the 222, I expect we would still be forming cases from 30-30 brass for our .219 Wasps.

The PPC brass will work well in a large size Remington bolt with a $2.00 alteration so the cost of a bolt alteration can't legitimately be used as a black mark against the PPC.

The next objection, to the weakness of the semi ballon, is totally unfounded.

I've seen PPC cases, which were accidently fed large overdoses of No. 7 "Rocket Fuel", come out of the chamber looking like a belted mag. case but there was no rupture or blown primer pockets. Not even primer leakage.

Such proportional overloads in a 222 Mag. case would have resulted in ruptures, primer pockets large enough for two primers, and that strange empty look on the shooter's face as he watches the smoke curl out around the bolt shroud.

Now I can hear someone saying: "Well, these short cases formed from 308 size brass have a stronger head than either". Hey! No doubt about that! The larger the diameter they are the stronger they must be. When you start shoving back cases to make them shorter you end up making case necks out of heavy case walls, a feature which leaves a lot to be desired.

Now the fact is there are some shooters (?) who could "do the number" on any case there is. If you are afraid of a blow up you aren't paying attention to your "business".

Availability of brass, and cost, is the next "beef" I hear. Sure there were problems in availability at first but that has long passed. As I recall, it hasn't been too long ago that we couldn't get 222 Mag. brass.

Price a drawback? I can't really believe that a man who spends $600.00 for a rifle and accessories will let approximately 10 cents extra a round stand in his way. Expecially when the quality is as good as this.

The way some shooters sort through their brass I expect the PPC would be less expensive in the long run.

Again I hear someone saying, "Well! If you used a case made from 308 brass there would never be a concern in getting brass". Right again, if you want to lay out $60.00 to $70.00 bucks (or more) for forming dies, form, trim, ream and hope the cases fireform out before the necks split. Put a pencil to that and see what your brass costs you.

I'm sure this must sound like a commercial for the PPC but it isn't meant to be.

However, when a man like Dr. Palmisano spends hours on research and development and a good deal of money having various shoulder angles, capacities, etc., checked out, compared and computed, I doubt that the PPC cartridges could honestly be considered "just another wildcat".

Every general gun magazine you pick up seems to have an article about some "new" wildcat that some gun "buff" has "designed" by making drawings and some even go as far as doing some

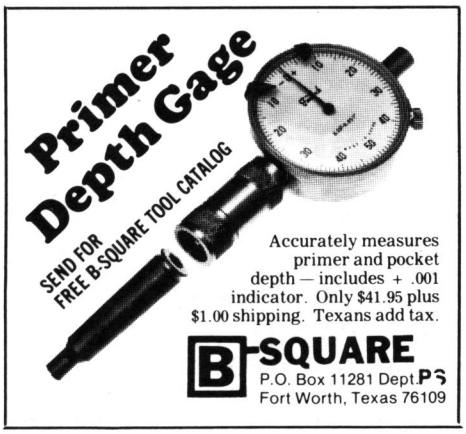

Benchrest Headlines — 25 Years Ago

by A. H. Angerman

- Heap big pow wow at DuBois, Pa. Big winners were Ron Sinclair (probably no relative to Becky), Mike Walker, Ed McNally, Ed Deems, Art Snyder, Joe Kusky, Don Robbins, Bob Pelzer, A. C. Nelson, W. M. Brown, Clyde Hart, Bill Cotter plus Weld, Page, Bob Hart, Korsak, Sickafoose and others of equal stature.
- A similar big bash was engineered by the Stonewall Rifle and Pistol Club of Staunton, Va. Otherwise known as the Buckhorn Range, it featured fresh air plus food and lodging at the Buckhorn Lodge, an out of this world house of hospitality just a mile or so down the road. If one ever left there hungry it was because his throat was slit. All you could eat was the slogan of the day. Great shooters like Culver, Pullen, Gottschall, Gordon, Pritt and Knestrick were there. I came to Staunton a little later just to eat at the Buckhorn, never as a great shooter. The Staunton Club put on an excellent shoot last April (1978) but alas the Buckhorn Lodge was no longer in operation.
- Bausch and Lomb came out with a hot new 40mm spotting scope for near $45.00. Claiming to be better, brighter, more brilliant for big bore and possibly also applicable to bench rest, the ad failed to cite its power! Dust caps were included — items not found today on a number of over $200 rifle scopes.
- The East End Blue Rock and Sportsmen's Club of Lewistown, Pa. started to push its annual bench rest shoot. Located about five miles east of Milroy, Pa. and nestled on the north side of a beautiful slope in the hills, its clubhouse also featured "the best food in the circuit", a claim to which I personally subscribed. It also had the best view, the best camping space, the best fellowship, the best of everything. The late Paul Aurand and "Dutch" Aumiller sparked this wonderful place.
- Unertl advertised his 2" Ultra Varmint scope regularly. Oddly he never illustrated his excellent 2" 24X target scope used almost exclusively by bench resters.
- Acting on the suggestions from their membership, the Wilkes Barre, Pa. club decided to try some bench rest shooting with rifles restricted to ten pounds. It was these early trials that eventually spawned what is now our heavy varmint class.

(Continued from page 6)

chronograph work.

These "wildcats" can't begin to be in the same class as the PPC.

Ferris and Dr. Palmisano didn't go through all the expense and time so that they might be acclaimed as something special, they wanted nothing more than something better.

They do not deserve all the negative criticism that is being received.

After all, they didn't need to offer it to the rest of us to use.

I'm afraid that the real fact is that there are too many people who carry some sort of prejudiced fear of anything different. Something that wasn't conceived by a major manufacturer.

I wonder if these people have accepted such things as hand dies, fiberglass stocks and neck turning?

To these people I say: "Get off their backs" and stop knocking something you haven't even given a try.

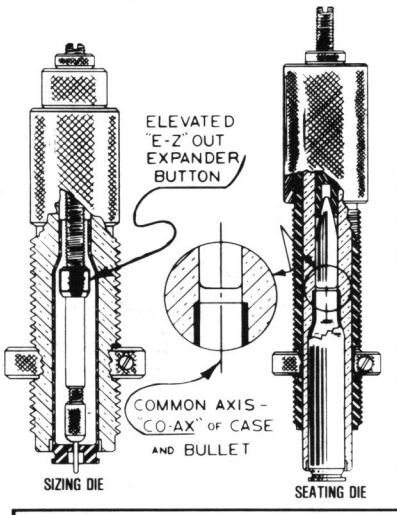

BONANZA BENCH REST RELOADING DIES

Bonanza Dies represent the first improvement in design since 1924. Eleven claims were allowed by the U. S. Patent Office. The sizer (Fig. 1) has an ELEVATED, glass-hard expander which is drawn through the case neck during the machine's greatest mechanical advantage and requires only finger tip effort. Since most of the cartridge neck is still in the sizer when expanding is started, better alignment of case and neck are obtained.

The Bench Rest Seating Die (Fig. 2) has a sliding sleeve in which the case is held all the way home in a tight fitting chamber. The bullet is also held in a tight fitting channel. Both case and bullet are held in close alignment ALL THE WHILE THE BULLET IS BEING SEATED. These dies are usable on any ⅞x14 press, yet cost no more than some straight line hand seaters alone. At $18.95 they are the reloader's best value. Why not order out a set today? Satisfaction guaranteed.

NEW! NEW!
NOW AVAILABLE FOR THE ALL NEW REMINGTON .22 AND 6MM BENCH REST CARTRIDGES, CHOICE OF FULL LENGTH OR NECK SIZER.

"SEE YOUR DEALER FIRST"

Please drop us a note for your FREE copy of Bonanza All Product Catalog

BONANZA SPORTS MFG. CO.
RELOADING DIVISION
412-6 WESTERN AVENUE • FARIBAULT, MINNESOTA 55021

Single Shot Rifles

Claude E. Roderick
509 Fifth Street
Monett, Missouri 65708

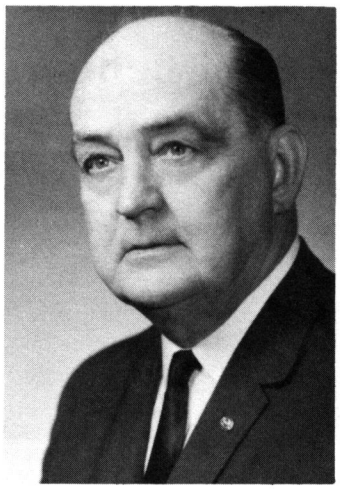

HARDNESS TESTING OF CAST BULLET ALLOYS

To ascertain accurate hardness of different mixtures of tin and lead that one makes up himself the following test was very carefully made to be used in the future as comparisons (these are NOT Brinell hardness tests but are very reliable, nonetheless) on my tin and lead mixtures. No antimony was used!

The POTTER LEAD HARDNESS TESTER with original factory scale using the two (2), and one (1) pound weights were used.

A Lee Production bottom pour valve (valve lift wide open) electric melting pot was used and a lab. grade thermometer was kept in the pot at all times and heat between 830-850° F was maintained at all times.

I used a Lyman Core Mould casting plain ends of .407" diameter X .499" long for test specimens for uniformity. I have found larger or smaller bullets will give a different reading even though they were poured from the same tin and lead mixture.

I used 97.5+% pure sheet lead, and National Lead Company pure tin — all by weight accurate to within a grain.

Five (5) pounds (35,000 grains) of the sheet lead was accurately weighed out. My powder scales were used to weigh out the exact grains of tin to be added to the pot for each test.

In order to maintain the 35,000 grains of pure lead in the pot at all times, all specimens were thrown back into the pot after testing and before adding the tin and fluxing for the next hardness. Beeswax was used in fluxing.

The 2 and 1 pound weights were left suspended on the lever for thirty (30) seconds before taking the reading. The tenth readings, other than the .5 and wholes as graduated on the scale, were obtained by careful interpolating. The average shown below was taken as I have found that a second reading gives erratic readings.

I started by taking readings on the melted pure lead before any tin was added. The larger numbers in the first column of scale readings indicates softer, and the smaller numbers a harder reading from the Potter Scale. The second column showing ratios of the mixtures shows the tin and then the lead content:

Average of, using 2-lb. weight:	Average of, using 1-lb. weight:
2.4 equals 1:10	Did not use
3.8 equals 1:16	Did not use
4.5 equals 1:20	Did not use
4.9 equals 1:22	Did not use
5.2 equals 1:25	Did not use
5.5 equals 1:28	1.0 equals 1:28
5.8 equals 1:30	1.1 equals 1:30
6.0 equals 1:32	1.2 equals 1:32
6.2 equals 1:35	1.3 equals 1:35
6.6 equals 1:40	1.5 equals 1:40
7.0 equals 1:45	1.6 equals 1:45
7.6 equals 1:50	1.8 equals 1:50
	2.8 equals 97.5+% Pure Sheet Lead

Bob Pease ACCURACY
Benchrest Equipment
Send 24 cent stamped envelop for 12 pg. brochure and listing for 40-XB and XBR's available for immediate delivery.
P.O. Box 787P
New Braunfels, TX. 78130

CUSTOM BULLETS
22 and 6mm
Made in Detsch dies.
for information
contact
Budd Tanner
838 E. Cedar Wapsie Rd.
Waterloo, Iowa 50701

Mainville Sportsman's Club Registered IBS Hunter Rifle Match

Conditions — cool, sunny, mild breeze.

April 9, 1978

100 yd. Name	Score	Caliber	Rifle	Scope	Bullet	Powder	Case	Primer
Master Class								
1. Vince Pastorella	248-9	308	Rem.	Lyman	Sierra	41 gr.	Fed.	Fed.
			Hart		168	H4895		
2. Paul Thompson	248-7	308	Rem.	Weaver	Sierra	40 gr.	Govt.	Fed.
			Hart		168	4064		
3. Marion Neuhard	247-4	308	Rem.	Lyman	Sierra	39-1/2 gr.	Fed.	Fed.
			Doug.		168	4064		210
4. Nick Yurchak	243-5	308	W70	Leupold	Rem.	38-1/2 gr.	Govt.	Rem.
			Win.			4064		
5. Paul Olewine	243-5	6MM	Rem.	Leupold		31 gr.	Rem.	Fed.
			Hart		68	748		210
6. Robert Linn	242-8	308	Rem.	Lyman	Sierra	39 gr.	Fed.	CCI-Br
			Hart		168	3031		
7. William Theis	242-3	6x47	Rem.	Lyman	Sierra	26-1/2 gr.	Fed.	Fed.
			Hart		70	4895		
8. Randall Fritz	240-13	308	Rem.	Lyman	Sierra	39 gr.	LC	Fed.
			Hart		168	4064		
9. Phil Irey III	240-1	308	Rem.	Weaver	Sierra	42 gr.	Fed.	Fed.
			Rem.		168	4064		210
10. Lester Bruno	239-6	308	Rem.	Lyman	Sierra	48 gr.	Fed.	Rem.
			Rem.		168	760		
11. Thomas Neuhard	237-6	308	Rem.	Lyman	Sierra	40 gr.	Fed.	Fed.
			Hart		168	4064		210
12. Bruce Michael	235-4	308	Rem.	Lyman	Sierra	43-1/2 gr.	Govt.	Fed.
			Rem.		168	768		
13. Guy Green	235-3	308	Rem.	Pecar	Sierra	40 gr.	Norma	Alcan
			Douglas	168	4064			
14. Agnes Sabo	235-3	308	Rem.	Lyman	Sierra	39 gr.	Fed.	Fed.
			Hart		168	4895		
15. Robert Drexler	235-1	6HLS	Rem.	Weaver		39 gr.	Win.	Rem.
			Hart		70	760		9-1/2
16. Carl Driscoll	233-2	308	Rem.	Lyman	Sierra	38 gr.	Win.	Rem.
			Douglas		168	4064		9-1/2
17. Milan Skodacek	228-5	308	Rem.	Lyman	Sierra	39 gr.	Govt.	Rem.
			Hart		168	4064		9-1/2
18. Roger Gower	223-2	308	Rem.	Lyman	Sierra	39-1/2 gr.	Fed.	Fed.
			Atk'n		168	4895		
19. Edward Gates	220-1	308	Rem.	Leupold	Sierra	40 gr.	Govt.	Fed.
			Hart		168	4895		215
20. Randy Fritz	197-4	308	Rem.	Leupold	Sierra	41 gr.	Fed.	Fed.
			Hart		168	4064		210
Hunter Class								
1. Conrad Eckrote	241-4	308	Rem.	Lyman	Sierra	39 gr.	Fed.	Fed.
			Hart		168	3031		
2. Robin Fritz	239-7	308	Rem.	Redfield	Sierra	39-1/2 gr.	Fed.	Fed.
			Rem.		168	4064		210
3. Bill Gebhardt	233-5	308	Rem.	Lyman	Sierra	41-1/2 gr.	Fed.	Fed.
			Rem.		168	4064		
*4. Dennis Edwards	230-5	308	Rem.	Redfield		43 gr.	Fed.	CCI.
			Rem.		168	748		
5. Warren Hauze	227-4	308	Rem.	Weaver	Sierra	39 gr.	Win.	Fed.
			Hart		168	4064		210
6. William Creasy	216-3	308	Mauser	Lyman	Sierra	41-1/2 gr.	Fed.	Fed.
			Fed.		168	4064		210
Marksman Class								
1. Richard Hons	223-1	22	Rem.	Weaver	WW	35 gr.	WW	WW
		250	Rem.		52	748		

* — New Shooter.

Marion Neuhard
Reporter

Mirage shields for most target scopes $9.00

EAR Ear Plugs 3 pair $1.50

Benchrest "T" shirts
White $6.00
Colored $7.00

Remington trigger conversions $22.00

Send SASE for information

Saunders Gun & Machine
145 Delhi Rd.
Machester, Iowa 52057

AIR GAGE BARRELS

FOR CLOSEST TOLERANCE — In "Chrome-Moly" and Stainless Steel. All calibers up to 458 Winchester. Blanks or Finished Turned in standard or target tolerance chambers.

Ask for free data on all our services.
DISCOUNTS TO GUNSMITHS

Write to

DOUGLAS BARRELS, INC.
5504 Big Tyler Road
Charleston, West Virginia 25312

ACTION SLEEVES
7075-T6 ALLOY
READY TO INSTALL ON REM. 600, 660, XP-100, 722, 700, AND 40-X
"Barrel Changers, Loading Ramps & Other Items."
WRITE FOR DEALER DISCOUNT
A.L. DAVIDSON
1215 Branson
Las Cruces, N M 88001

I.B.S. 200-300 Yard Championship
August 27, 28, 1977
Stittsville Shooting Ranges

Heavy Bench
200-300 yards

Competitor	Warm Up	Match 1	Match 2	Match 3	Match 4	Match 5	200 Agg.	Place	300 Agg.	Place	200-300 Grand Agg.	Place
Alfred Handschuh	1.539	.773	1.336	1.456	.834	1.315	.5714	1				
300 yards	1.845	2.338	2.822	3.280	3.265	2.435			.9427	4	.7570	1
Randy Fritz	2.149	1.094	1.356	1.526	1.820	1.413	.7209	2				
300 yards	3.290	3.367	2.701	2.407	2.570	1.983			.8685	1	.7947	2
Jack Hutchison	.790	1.213	1.429	1.481	1.011	2.130	.7264	3				
300 yards	1.376	1.847	3.111	2.105	2.662	3.401			.8751	2	.8008	3
Robert De Monstoy	DNQ	1.377	2.049	1.121	.837	1.917	.7301	4				
300 yards	2.501	3.520	3.358	1.793	3.134	2.391			.9464	5	.8382	4
Wayne Tubman	DNQ	1.559	1.398	1.461	1.875	1.621	.7914	5				
300 yards	2.263	3.108	3.073	2.617	2.460	2.796			.9369	3	.8642	5

Light Varmint
200-300 yards

Glenn Price	2.085	.851	.653	.579	.670	1.958	.4711	1				
300 yards	3.220	1.287	1.869	1.427	1.441	2.443			.5645	1	.5178	1
Ned Hosey	.785	1.354	.844	.893	1.278	1.343	.5712	3				
300 yards	1.867	1.340	2.870	1.176	2.221	1.302			.5939	3	.5826	2
Paul Hooper	.994	.924	.856	.742	1.415	2.608	.6545	6				
300 yards	2.056	3.033	1.545	2.423	2.039	1.242			.6855	5	.6700	3
Robert White	1.316	.532	.848	1.043	.928	1.496	.4847	2				
300 yards	2.874	2.249	3.346	2.978	2.208	2.121			.8601	15	.6724	4
Charles Fountaine	1.395	1.549	.771	1.095	1.627	1.711	.6753	7				
300 yards	1.837	2.133	2.745	1.392	2.587	1.197			.6703	4	.6728	5
Bill Gammon	DNQ	1.530	.798	1.334	1.655	2.608	.7925	15				
300 yards	DNQ	2.467	1.147	1.449	2.069	1.756			.5925	2	.6925	6
Edgar Joiner	4.291	.982	1.357	1.375	1.353	2.272	.7339	14				
300 yards	1.932	2.723	1.654	1.811	2.687	1.556			.6954	8	7146	7
Richard Brownell	1.277	1.155	1.263	1.540	1.390	1.635	.6983	8				
300 yards	2.376	1.737	2.387	2.146	2.035	2.992			.7531	11	.7257	8
Joe Vinci	.873	1.393	1.072	1.517	1.715	1.576	.7273	11				
300 yards	1.679	3.043	1.396	1.970	3.161	1.407			.7318	10	.7296	9
Norm Dixon	1.028	1.435	1.141	1.432	1.537	1.732	.7277	12				
300 yards	3.757	2.925	1.970	3.158	1.360	2.047			.7640	12	.7458	10

Heavy Varmint
200-300 yards

Norm Dixon	.832	.707	.338	.712	1.540	1.149	.4446	3				
300 yards	1.589	1.020	1.414	1.741	1.101	2.316			.5061	2	.4754	1
Glenn Price	.632	.594	.933	.843	1.745	.860	.4975	7				
300 yards	2.318	1.143	2.776	1.948	.765	1.495			.5418	3	.5196	2
Paul Hooper	1.827	.615	.720	.847	.971	.888	.4041	1				
300 yards	2.174	1.368	2.263	2.096	1.609	2.287			.6415	7	.5228	3
Paul Olewine	.781	.665	.926	1.064	1.250	.891	.4796	5				
300 yards	2.033	1.161	1.774	2.080	2.393	1.458			.5911	4	.5354	4
Charles Fountaine	1.379	1.180	.889	.970	1.058	.849	.4946	6				
300 yards	1.086	2.377	1.725	1.716	1.318	1.774			.5940	5	.5443	5
Tom Neuhard	.796	.936	1.166	.913	.853	.851	.4719	4				
300 yards	2.564	1.496	2.887	2.303	1.141	2.357			.6789	10	.5754	6
Jack Hutchison	1.435	.973	.992	.805	1.324	1.152	.5246	9				
300 yards	1.803	2.229	1.682	1.355	1.861	2.427			.6369	6	.5808	7
Robert White	.712	.519	1.310	1.125	1.292	.784	.5030	8				
300 yards	1.983	2.238	1.216	.957	2.025	4.153			.7059	12	.6044	8
Ed Knobloch	.868	.452	1.505	1.357	.959	1.317	.5590	11				
300 yards	1.783	2.538	1.175	1.996	2.369	2.384			.6975	11	.6282	9
Joe Vinci	1.113	.740	.789	.793	3.004	.855	.6181	16				
300 yards	1.587	1.235	2.114	1.598	1.559	3.230			.6491	8	.6336	10

BENCHREST RIFLE BARRELS
MADE BY
R.G. SHERER
We have Wichita Benchrest and Varminter Actions. Also, Falling Block Works Single-Shot Actions Models J and K — In Stock!
SCHUTZ BROTHERS INC.
P.O. Box 300
North Manchester, Indiana 46962

Editor's Note: The report you are now reading is the result of months of effort. We have tried that long to obtain a copy of it for your information.

Repeated requests were ignored and promises of delivery were broken. We had about given up on this report.

Finally our good friend Reg Gale ran a copy in the Canadian Newsletter. Alan King also sent me his copy so that I could run the report. Let us give credit where credit is due!

Due to the late arrival of the report we will not edit it and delay it any further. Basically it is as the shoot report presented it. We hope it is of value to you.

R.R.M.

EQUIPMENT LIST
I.B.S. 200-300 Yard Championship
August 27,28, 1977
Stittsville Shooting Ranges

Name	Caliber	Action	Barrel	Gunsmith	Stocker	Scope	Load	Bullet
Heavy Varmint								
101 Richard Brownell	6SB	Rem.	Tar.Works	Butler	RLB	Lyman	28.5-H322	Nosler 70
102 Wayne Tubman	6mm	Rem.	Hart	Hart	Self	Lyman	27-N203	McCracken 70
103 Jack Hutchison	308	Rem.	Hart	Hart	Hart	Lyman	45-H4895	Sierra 168
104 Paul Hooper	222	Hart	Hart	Dewey	Brownell	Red.	22-RL 7	AJ 51
105 Joe Vinci	6PPC	Hart	Mclein	Butler	Brownell	Rem.	28.5	Euber
106 Ray Thomas	6SB	Hart	Tar.Works	Butler	Hart	Leup.	28.5-N201	McCracken 70
107 Martin Herbert	222Mag.	Rem.	Hart	Hart	Herbert	Red.	27.0-H335	HM
108 Tom Neuhard	308	Rem.	Hart	Hart	Hart	Red.	41-H4895	Sierra 168
109 Bill Gammon	222	Rem.	McMillan	Butler	Brownell	Red.	25-748	Remington 52
110 Randy Fritz	308	Rem.	Rem.	Rem.	Rem.	Red.	41-H4895	Sierra 168
111 Helen Long	6x47	Rem.	Rem.	Long	Rem.	Leup.	23-4198	Hart 70
112 Paul Olewine	308	Hart	Hart	Self	Self	Leup.	49-760	Custom 160
113 John Cohen	222	Rem.	Hart	Brownell		Red.	21.5-N200	McCracken
114 Ed Joiner	6x47	XP100	Hart	Hart	Hart	Lyman	26.6-4895	Sierra 70
115 Robert De Monstoy	6mm	Rem.	Hart	Paul Kempher		Lyman	4895	Nosler 70
116 Allan King	308	Rem.	Hart	Hart	Hart	Leup.	39-IMR4895	McCracken 168
117 Clyde Hart	222	Rem.	Hart	Hart	Hart	Red.	25.4-748	Nosler 52
118 Norm Dixon	6PPC	Rem.	Hart	Self	Self	Leup.	28.8-N201	Custom 68
119 Lou Church	6mm	Shilen	Hart	Butler		Leup.	29.5-4895	Euber 68
120 Lynn Tucker	222	Rem.	Rem.		Self	Lyman	25-H335	Herbert 52
121 Charles Fountaine	6PPC	Rem.	Hart	Butler	Brownell	Lyman	28.5-H322	Euber 68
122 Glenn Price	6x47	XP	McMillan	McMillan		L/S	28-4895	Remington 70
123 Gary Long	308	Hart	Hart	Hart	Self	Lyman	43.5-748	Sierra 168
124 Lester Bruno	308	Rem.	Hart	Hart	Hart	Lyman	41-4895	Sierra
125 Richard Otis	223S	Rem.	Atkinson	Self	Self	Red.	26-4895	DLB 51
201 Butch Greavette	22PPC	Rem.	Hart			Lyman		
202 Bob White	308	Rem.	Hart	Hall	Self	Lyman	39.5-RE11	Hornady 168
203 Ed Knobloch	222	Rem.	Hart	Hart	Hart	Red.	20.5-4198	Remington 52
205 Ned Hosey	6x47	XP100	McMillan		Self	Lyman	25-RL7	Own 61
206 Joseph Winters	222	Rem.	Rem.			Lyman	20-RL7	Nosler
207 Dan Hufnail	222	Rem.	Shilen	Butler	Hart	Leup.	24-4895	Own 52
210 Hank Gonnella	222Mag.	Rem.	Hart	Hart	Hart	Red.	23.5-4198	Nosler 52
Light Varmint								
101 Richard Brownell	6SB	Rem.	Tar.Works	Butler	RLB	Lyman	28.5-H322	Nosler 70
102 Bob White	308	Rem.	Hart	Self	Self	Lyman	49.5-760	Hornady168
103 Bill Martin	6x47	Rem.	Rem.	Rem.	Rem.	Lyman	29.5-748	Reger 70
104 Paul Hooper	6Russ.	Rem.	Hart	Butler	Brownell	Leup.	RE11	McCracken 70
105 Joe Vinci	6PPC	Rem.	Hart	Butler	Brownell	Lyman	28.5	Euber
106 Ed Knobloch	222	Rem.	Hart	Hart	Hart	Lyman	20.5-4198	Remington 52
107 Dan Hufnail	222	Rem.	Hart	Butler	Brownell	Lyman	24-4895	Own 52
108 Tom Neuhard	6x47	Rem.	Rem.	Rem.	Rem.	Leup.	24.5-RL7	Hart 70
109 Bill Gammon	22PPC	Shilen	Shilen	Butler	Brownell	Leup.	30.5-748	Remington 52
110 Joseph Winters	222	Rem.	Rem.			Lyman	20-RL7	Nosler
111 Helen Long	6x47	Rem.	Rem.	Long	Rem.	Leup.	23-4198	Hart 70
112 Paul Olewine	308	Rem.	Hart	Self	Self	Leup.	49-760	Custom 160
113 Hank Gonnella	223	Rem.	Rem.	Rem.	Rem.	Leup.	21.5-4198	Nosler
114 Ed Joiner	6x47	Rem.	Hart	Hart	Hart	Leup.	26.6-4895	Sierra 70
115 Ned Hosey	6x47	XP	McMillan		Self	Lyman	25-RL7	Own 62
116 Allan King	6x39	Shilen	Hart	Ferguson	Neatby	Leup.	34-748	McCracken 70
117 Clyde Hart	6x47	Rem.	Hart	Hart	Hart	Leup.	28.5-N203	Lynn 70
118 Norm Dixon	6PPC	Rem.	Rem.	Self	Self	Leup	28.8-N201	Custom 68
119 Lou Church	6mm	Shilen	Hart	Butler		Leup.	29.5-4895	Euber 68
120 Lynn Tucker	6mm	Rem.	Hart	Masker	Masker	Lyman	4895	Detsch 70
121 Charles Fountaine	6PPC	Rem.	Hart	Butler	Brownell	Lyman	28.5-H322	Euber 68
122 Glenn Price	6x47	XP	McMillan	McMillan		L/S	28-4895	Remington 70
123 Gary Long	308	Rem.	Rem.	Rem.	Rem.	Leup.	43.5-748	Sierra 168
124 Lester Bruno	308	Rem.	Hart	Hart	Hart	Lyman	41-4895	Sierra
125 Butch Greavette	222	Rem.	McMillan	McMillan		Leup.	22-H322	Remington 52
Heavy Bench								
201 Al Pelletier	308	Rem.	Hart	Butler	Brownell	Unertl	4895	Sierra 168
202 Wayne Tubman	308	Hart	Hart	Hart	Hart	Red.	46-N203	Sierra 168
203 Jack Hutchison	308	Rem.	Hart	Hart	Hart	Red.	41.5-4895	Sierra 168
204 Alfred Handschuh	308	Hart	Hart	Hart	Self	Unertl	40.5-H4895	Sierra 168
207 Martin Herbert	222	Rem.	Rem.	Herbert	Herbert	Unertl	27.0-H335	HM
210 Randy Fritz	308	Hart	Hart	Hart	Hart	Lyman	41-H4895	Sierra 168
212 Andy Fazio	6mm	Rem.	Hart	Hutchinson		Unertl	31-4895	Winchester
215 Robert De Monstoy	308	Rem.	Hart	Herbert	Herbert	Unertl	4895	Sierra 168

YES!

... I am still making the original micrometer conversion for the Lyman 55 Powder Measure

H. L. CULVER
1219 N. Stuart St.
Arlington, Va. 22201

BLUING STAINLESS STEEL
complete riflesmith
services brochure 25 cents
J. Korzinek, Riflesmith
RD 2, Canton, Pa. 17724

GTB BENCHREST BULLETS
22cal 6mm 30cal
Send stamp addr. envelope for info to:
Bob Cauterucio
482 Comerwood Ct. So. S.F. Ca.94080

Equipment List for Dunham's Bay Registered Match of March 19, 1978

Conditions — rain, snow, bright sun, very windy

Competitor		Caliber	Action	Scope	Barrel	Gunsmith	Stocker	Load	Bullet	Primer
1. George Jackson	.3378	6PPC	40X	Ly-Sieb. 25X	Hart	Butler	Butler	29 H-322	Euber 68	Fed 205
2. Lee Euber	.3718	6PPC	40X	Ly-Sieb. 30X	Hart	Butler	Butler	30.5 N201	Euber 68	Fed 205
3. Erwin Elithorpe	.3778	6PPC	Rem.	Lyman 20X	Hart	Butler	Boise	30.0 N201	Euber 68	Fed 205
4. Joseph Winters	.3942	6PPC	Shilen	Red 24X	Hart	Butler	Butler	30.5 N201	Euber 68	Fed 205
5. Norm St. Pierre	.4038	6PPC	Rem Slv.	Leup. Sieb. 25X	Hart	Boise	Hart	29.7 4895	Reid	Fed 205
6. Lou Church	.4114	6PPC	Shilen	Leup 24X	Hart	Butler	Butler	30.5 N201	Euber 68	Fed 205
7. Bob Reid	.4150	6PPC	40X Slv.	Leup. 24X	Hart	Boise	Hart	30 H-4895	Reid 70	Fed 205
8. Myles Hollister	.4222	6PPC	40X	Ly-Sieb. 32X	Hart	Butler	Butler	28.5 N201	Sherman 70	Fed 205
9. Joe Vinci	.4294	6PPC	Hart	Red 3200 24X	McMillan	Butler	self	29.0 N201	Euber 68	Fed 205
10. Allie Euber	.4336	6PPC	600 Slv.	Ly-Sieb. 25X	Hart	Butler	self	29.0 N201	Euber 68	Fed 205

Equipment List for Dunham's Bay Registered Match of April 9, 1978

Conditions — bright sun, cold, very windy

Competitor		Caliber	Action	Scope	Barrel	Gunsmith	Stocker	Load	Bullet	Primer
1. Allie Euber	.2774	22PPC	Slv 600	Ly-Sieb. 25X	Hart	Butler	self	28.0 N201	Dixon 51	F205
2. Erwin Elithorpe	.3724	6PPC	Rem.	Lyman 20X	Hart	Butler	Boise	30.0 N201	Euber 68	F205
3. Ritchie Moorhead	.3784	22PPC	Rem. 600	Red. 24X	Hart	Sinclair	self	27.5 H322	Rem 52	F205
4. Tom Boise	.3450	222	XP-100	Red. 24X	Hart	Hart	self	21.7 RL-7	Reid 52	Rem 7-1/2
5. Ricky Butler	.4070	22PPC	Rem.	Leup. 24X	McMillan	Butler	Butler	29.0 N201	Sier. 52	F205
6. Joe Winters	.4406	6PPC	Shilen	Red. 24X	Hart	Butler	Butler	30.0 N201	Euber 68	F205
7. Seely Masker	.4484	Wich.	22PPC	Uner. BV-20	Hart	Masker	Masker	29.3 H322	Hollister	F205
8. Gordy Euber	.4606	40-X	6PPC	Ly-Sieb. 30X	Hart	Butler	Butler	29.0 H322	Euber 68	F205
9. Ira Farnsworth	.4642	222	Hart	Ly-Sieb. 30X	Hart	Farns.	B. Reid	25.5 748	Sier. 53	Rem. 6-1/2
10. Norm St. Pierre	.4688	6PPC	——	Leup. 24X	Hart	Hart	Hart	29.7 4895	Reid	F205

Central Pennsylvania Rifle Club Inc. Dauphin, Pa. April 23, 1978
IBS Registered Hunter Rifle Match

Name	Score	Scope	Rifle	Cal.	Bullet	Powder	Primer	Case
Masters								
1. Olewine, P.F.*	246-6			243				
Dauphin, Pa.								
2. Pastorella V.*	243-11	Lyman	Rem	308	Self	H4895	Fed	Fed
Milnesville, Pa.		6				41		
3. Thompson, P.H.*	243-9	Weaver	Rem	308	Sierra	4064	Fed	Govt
Dauphin, Pa.		4/12				40		
4. Linn, R.A.*	243-7	Lyman	Rem	308	Sierra	3031	CCI	Fed
York, Pa.		6	40X		168	39	BR	
5. Newhard, M.*	243-5	Lyman	Rem	308	Sierra	4064	Fed	Fed
Bloomsburg, Pa.		6			168	40		
6. Eckrote, C.C.	242-6	Lyman	Rem	308	Own	3031	Fed	Fed
Drums, Pa.		6	700		168	38	210	
7. Gower, R.A.	241-7	Weaver	Rem	308	Sierra	4895	Fed	Fed
Slatington, Pa.		6			168	39		
8. Green, Guy	241-6	Pecar	Rem	308	Sierra	4064	Alcon	RA60
Hughesville, Pa.		6	722		168	38		
9. Loucks, J.L.	240-9	Bshnl	Win	308	Sierra	4831	Rem	Win
York, Pa.		6			168	46		
10. Newhard, T.E.	238-5	Lyman	Rem	308		4064	210	Fed
Bloomsburg, Pa.		6			168	40		
11. Loucks, L.R.	236-5	Lpd	Rem	308	Sierra	4895	Rem	Win
York, Pa.		6				41		
12. Sabo, Agnes	236-4	Lyman	Rem	308	Sierra	4895	Fed	Fed
Hazleton, Pa.		6			168	39		
13. Fritz, Randall	235-2	Lyman	Rem	308	Sierra	4064	Fed	LC
Bloomsburg, Pa.		6			168	39		
14. Ressler, L.	231-4	Lyman		308	Sierra	4895	Fed	Fed
York, Pa.		6	722			41		
15. Gates, E.L.	229-2	Weaver	Rem	308	Sierra	4895		W W
Harrisburg, Pa.		T/6	700		168	42	215	
16. Fritz, Randy	227-4	Lpd		308		4064	Fed	Fed
Bloomsburg, Pa.		3/10	722		168	39.5	210	
17. Driscoll, C.S.	226-0	Lyman	Rem	308	Sierra	4064	Rem	W
Forksville, Pa.		6	700		168		9-1/2	
18. Long, Gary H.	223-0	Lyman	Rem	22/250	Sierra	4064	Fed	Rem
Millville, Pa.		6			52	34.5		
Hunter								
1. Parry, R.C.*	241-6	Lyman	Rem	308		3031	R	Win
Forksville, Pa.		6			168	38		
2. Gebhardt, Bill	239-4	Lyman	Rem	308	Sierra	4064	210 M	Fed
Lock Haven, Pa.		6			168	41-1/2		

* — Awarded Prize money

Warm-up match - Olewine, P.F. 50-3

We wish to thank all who attended our match and hope to see you Aug. 6, 1978 for our next match. Bring a friend along.

C.D. McElwee.
Reporter

TRADING POST

Groups of figures, abbreviations and initials count as words. Hyphenated word counts as two words. Name and address of advertiser is counted. Use full words instead of initials and abbreviations and make your meaning entirely clear.

Classified type ads: no display. **Rates:**—10c per word per insertion, prepaid. Minimum charge $1.00. Closing date for ads is the last Saturday of the month preceding publication.

FOR SALE:

6X47 SPORTER, SLEEVED Rem. 600. Built and stocker by CR & PJ Hart. 2 oz. Hart trigger. 20X Lyman LWBR. Ferguson dies. Needs new barrel. $300.00.

.222 MAG. HEAVY BENCH GUN. Rem. 720 action with 2"x14" steel sleeve and heavy stock by CR & PJ Hart. 2 oz. Hart trigger and Hart barrel. 30X Lyman super target with 1/16 dot front and rear mechanical rests, can also be used on sandbag. Alum "I" beam rail and .308 bolt also goes with it. Dies and cases. Here's a chance to get into heavy gun class for $600.00. Robert Woollens, 15 Ironwood Circle, Dover, DE 19901. Phone 302-678-0113.

* * *

TARGETS: 6 frame Varmint or 5 bull Hunter on 10-1/2" X 12" tagboard. $5.50 per 100 postpaid. Quantity discounts to clubs or dealers. Ron Whitaker, 89-15 Parsons, Jamaica, N.Y. 11432.

* * *

UNERTL PROGRAMMER. Excellent. 24X Unertl 1/8" dot. $175.00 postpaid. Ron Whitaker ph. 212-291-0041.

* * *

WANTED: Brown Little Wiggler. Ron Fisher, Rt. 2 Hamilton, MT. 59840.

WANTED

Advertising and Promotion Manager

Precision Shooting Magazine is seeking someone to fill the position of advertising and promotion manager. If you are an ambitious person who enjoys contacting shooting and sporting oriented businesses and individuals we would like to hear from you.

Space does not allow for a complete description here but we are seeking someone to serve as a contact person in the promotion of Precision Shooting as a valuable source for advertisers who would like to present their products to a group of serious buyers.

We are also seeking to expand the readership of the magazine. Precision Shooting can offer much to the shooters of the world. We find that increasing numbers of shooters would like to subscribe but do not know where to find us. Our promotion manager can help them become aware of our potential.

If you are interested in this position please contact:
Precision Shooting Magazine
Ritchie R. Moorhead, Editor
P.O. Box 6
Athens, PA 18810
or call evenings at 717-888-7801.

FOR SALE

Winchester Model 70, 300 Winchester Magnum, Hart stainless steel barrel. $260.00

Redfield 3200 scope with sunshade & medium crossshair. $100.00

Redding 300 Winchester Magnum loading die set. $8.00

Remington 40X Br, 222 Remington, 500 rounds, Redfield 3200, 16X medium crosshair, dies & cases. $385.00.

Wichita front rest with bag. $25.00.

Lee target model reloader. $15.00.

Unertl 24X 63 spotting scope with Freeland regal bipod. $150.00. Jim Laughlin, R.D. 3, Box 297, Towanda, PA 18848. 717-265-6933.

BACK ISSUES AVAILABLE
50 cents each

1975—All but Feb., May and September.
1974—All but March
1973—All but February, March and July
1972—All issues on hand
1971—All but January
1970—All but January, April, May, June and July
1969—All but June
1968—All but February
1967—All but December

SEELY MASKER
CUSTOM RIFLES
REBARRELING — RECHAMBERING — RESTOCKING
FULL-TIME OPERATION
261 Washington Avenue • Pleasantville, N.Y. 10570
Tel. (914) 769-2627

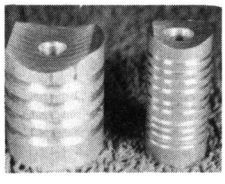

ALUMINUM BEDDING BLOCKS

PRECISION PRODUCTS AND SERVICE SPECIALIZING IN TARGET, BENCH REST & VARMINT RIFLES.
SEND 25 CENTS FOR LIST

Custom Products
NEIL A. JONES
686 BALDWIN STREET
MEADVILLE, PA 16335

Rem. 600 steel floor plate and trigger guard.

48" Cleaning rod sets.

Micrometer conversion for Lyman 55 powder measure, Guaranteed within .001 repeatability.

Pill bottle adaptor-baffle

Depriming Tools.

Floating Neck Sizing Dies.

Send S.A.S.E. for brochure.

Electronic Dripper

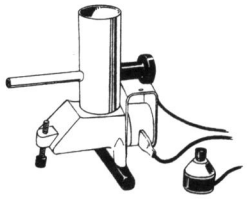

This is a picture of my new Electronic Dripper. There isn't room to explain it so why don't you just order one, don't send any money. Try it out for a time, if completely satisfied pay the invoice, if not return for full credit, no questions asked. Just send me your name and address and say, 'I want an Electronic Dripper'.
Price $9.50

Shooters Accessory Supply, 3091 N. Bay Drive, North Bend, Oregon 97459.

WICHITA ADDS VARMINT RIFLE TO LINE

Wichita Engineering & Supply of Wichita, Kansas has introduced a high quality varmint rifle to their line of precision long guns.

The heart of the new rifle is the action, which is based on the acclaimed Wichita Model 1375 so popular with benchrest shooters. The large bolt, 7/8" in diameter, is ground to a perfect fit with the receiver, and the bolt face is recessed for maximum strength. The cocking block and firing pin are housed with the bolt and shroud. A loading ramp is machined into the bottom of the receiver of single shot models. In the event of a ruptured case, or perforated primer, gases are harmlessly vented through a trio of pressure ports in the bolt.

The fully adjustable Canjar trigger is factory set at 3-1/2 - 4 pounds. The 20 1/8" chrome-moly barrel is precision fitted to assure perfect alignment with the receiver.

The Barrelled action is glass bedded in a stock of AAA Fancy American walnut. The natural beauty of the wood is brought out by the hand rubbed finish. Checkering — also by hand — is twenty lines to the inch.

Standard chamberings include: .17 Rem., .22 PPC, .222 Rem., .222 Rem. Mag., 22-250, .223 Rem., 6 x 47, .243 Win., 6mm PPC, 6mm Rem., and .308 Win. Chamberings in other calibers are available on special order.

Every Wichita rifle is shipped in a sturdy carrying case, manufactured by Protecto Plastics.

Reloading dies matched exactly to the individual rifle's chamber are available as an accessory. They are serially numbered to match the rifle, and designed for use in a conventional reloading press, or as hand tools.

For more information, please contact: Mr. Nolan Jackson, President, Wichita Engineering & Supply, 333 Lulu Street, Wichita, Kansas 67211. Phone (316) 265 0661.

HODGDON

MODERN SMOKELESS POWDERS

THE FAVORITE OF HANDLOADERS SINCE 1946

H322

RIFLE POWDER

This extruded powder fills the gap between H4198 and BL-C(2), and performs best in small to medium capacity cases. H322 has proved to be capable of producing fine accuracy in the 22 cal and 308 bench-rest guns.

1 lb. can ..... $4.95 sugg. retail
8 lb. keg ..... $36.95 sugg. retail

NEW DATA MANUAL

New data on Pyrodex and Black Powder.
New section—How to reload for beginners.
New format and calibers.
Information on Rifle, Pistol, Shotgun and Lead Bullet Loads.

NOW AVAILABLE... $4.95
SEE YOUR FIREARMS DEALER

HODGDON POWDER CO.

7710 West 50 Highway Shawnee Mission, Kansas 66202

"YOU HAVE TRIED THE REST
NOW GET THE BEST"

LONGO CONVERSION
LYMAN 55 MEASURE

Increased accuracy due to modified drum assembly.

Charge repeatability to .1 gr. or less according to powder.

Cavity plunger, screw driven for positive control.

Turns counting dial insures return to predetermined charge setting to within .5 gr. *Saves time when resetting measure*

Extremely fine adjustment of cavity by 100 divisions per dial revolution. (.0004" per division) *If using 748 powder 10 divisions equals .5 gr.*

"BOTTLE CONVERSION SHOWN"

Conversion cost:
Your measure **$42.00 postpaid**
New measure **$65.00 postpaid**
For detachable bottle add $17.00 includes 1 bottle (use MEC powder bottle)
Penna. residents add 6% sales tax

ED LONGO **111 N. Hyde Park Ave.**
Price Subject to Change
Scranton, Pa. 18504 Phone: 717-347-4366

SOUTH CREEK ROD & GUN
April 2, 1978 — Match 6

Agg Winners

1. Lloyd Richards ..... .4335
2. Wally Hart ..... .4606
3. Art Blensinger ..... .5658
4. Carl Lynn ..... .5670

Match Winners

match 1

1. Lloyd Richards ..... .330
2. Jeanne Lynn ..... .371
3. Stanley Bombaski ..... .415
4. Lynn Congdon ..... .456

MATCH 2

1. Wally Hart ..... .294
2. Dave Benedick ..... .403
3. Carl Lynn ..... .445
4. Guy Green ..... .459

MATCH 3

1. Bill Gebhardt ..... .240
2. Dave Benedick ..... .254
3. Art Blensinger ..... .343
4. Jeanne Lynn ..... .352

MATCH 4

1. Clyde Hart ..... .349
2. Paul Lloyd ..... .369
3. Frank James ..... .408
4. John Moulthrop ..... .443

MATCH 5

1. Bob DeMonstay ..... .301
2. Lloyd Richards ..... .328
3. Ritchie Moorhead ..... .381
4. Paul Olewine ..... .386

JR. WINNER

1. Thomas Kaufmann ..... .5914

Agg. Best 5 Matches of year to date

1. Jack Deming ..... .4726
2. Lloyd Richards ..... .4748
3. Ritchie Moorhead ..... .4859
4. Paul Olewine ..... .4904
5. Clyde Hart ..... .4962
6. Art Blensinger ..... .5039
7. Jerry Guilds ..... .5063
8. Stanley Bombaski ..... .5120
9. Carl Lynn ..... .5135
10. Carl Nye ..... .5238

SOUTH CREEK ROD & GUN CLUB
April 16, 1978 — Match 7

Agg Winners

1. Ritchie Moorhead ..... .3938
2. Lloyd Richards ..... .4378
3. Clyde Hart ..... .4510
4. Jerry Guilds ..... .4610

MATCH 1

1. Frank James ..... .160
2. Clyde Hart ..... .225
3. Jerry Guilds ..... .244
4. Frank Obrochta ..... .250

MATCH 2

1. Walter Malinski ..... .135
2. Lloyd Richards ..... .295
3. Ritchie Moorhead ..... .334
4. Frank Obrochta ..... .340

MATCH 3

1. Ray Wilson ..... .264
2. Stanley Bombaski ..... .274
3. Lynn Tucker ..... .298
4. Lloyd Richards ..... .320

MATCH 4

1. Ritchie Moorhead ..... .106
2. Jerry Guilds ..... .282
3. Jack Deming ..... .394
4. Lloyd Richards ..... .440

MATCH 5

1. Paul Lloyd ..... .352
2. Clyde Hart ..... .415
3. Ed Joiner ..... .424
4. Lloyd Richards ..... .436

SMALL GROUP

R. Moorhead ..... .106

JR. WINNER

Thomas Kaufmann ..... .7574

Agg Best 5 matches year-to-date

1. Jack Deming ..... .4451
2. Ritchie Moorhead ..... .4504
3. Clyde Hart ..... .4551
4. Lloyd Richards ..... .4570
5. Jerry Guilds ..... .4619
6. Stanley Bombaski ..... .4782
7. Paul Olewine ..... .4904
8. George Stickler ..... .4980
9. Art Blensinger ..... .5039
10. Jim Zeyn ..... .5125

1978 COUNCIL CUP RIFLE RANGE, WAPWALLOPEN, PA.
I.B.S. REGISTERED MATCHES

Heavy Varmint will be shot mornings. Upon completion of HV, Light Varmint and Heavy Bench will be shot together.
DATE—June 24, 25
CLASSES—Heavy Bench, Heavy Varmint, Light Varmint
STARTING TIME—8:30 a.m.
Saturday — June 24th — 100 Yards
Sunday — June 25th — 200 Yards
Heavy Bench—six 10-shot matches each day.
Heavy Varmint & Light Varmint—six 5-shot matches each day.
TROPHIES—Heavy Bench 1st., 2nd., & 3rd Grand AGG.
Light Varmint 1st., 2nd., & 3rd. Grand AGG.
2-Gun 1st. & 2nd.
Heavy Varmint—Instead of trophies, silver dollars will be awarded to the following:
Each match winner—100 & 200 Yard. Smallest group of 100 & 200 Yard. 1st, 2nd & 3rd place of 100 Yd. Agg. 1st, 2nd & 3rd place of 200 Yd. Agg. 1st, 2nd & 3rd place of Grand AGG.
IBS Registration—$1.00 per day
Range Registration—$8.00 per day; $4.00 second rifle.

INTERNATIONAL VARMINT & SPORTER CHAMPIONSHIP August 24, 25, 26, 27

Starting time: 8:30 a.m.
August 24th—Light varmint & Sporter—100 Yards.
August 25th—Light varmint & Sporter—200 Yards
August 26th Heavy Varmint—100 Yards
August 27th—Heavy Varmint—200 Yards
IBS Registration—$1.00 per day
RANGE Registration—Aug. 24 & 25—$15.00 per day. Aug. 26 & 27—$10.00 per day.
TROPHIES
IBS Trophies—Rotating plaque and Keeper plaque for winner of each class and 3-gun aggregate. Top 20 patches for each class and 3-gun aggregate. IBS awards for winner of all record matches and aggregates.
RANGE Trophies—In addition to the IBS trophies the range will award a trophy for second, third and fourth place in all three classes plus the 3-gun aggregate.
Small group trophies will be given for the smallest group in each class at both 100 and 200 yards.
Camping—Electricity, Water & toilet facilities available. No Camping charge—Electrical connection $1.00 per day. Please, no air conditioners. Meals will be served at the range.

ROBERT W. HART & SON, INC,
401 Montgomery St., Nescopeck, Pa. 18635. Telephone 717-752-3481

PRECISION STAYNLESS STEEL MATCH TARGET BARRELS

Blanks in calibers .224, 6mm, 6.5 mm, 7mm and .25 and .30 calibers available.

also .22 rim fire blanks.
For prices and particulars, write:

Hart Rifle Barrels, Inc.

LaFayette, New York 13084, R.D. #2 Telephone Tully, N. Y. Area 315 NX 6-5624

INTERNATIONAL BENCHREST SHOOTERS APPLICATION

Name .....

Address .....

City ..... State ..... Zip .....

IBS MEMBERSHIP

( ) IBS membership and PS for one year — $10.00

( ) Associate member (no magazine) other members of same household — $4.00

( ) Junior member (no magazine) under age 16 — $2.00

( ) Club Affiliation and PS for one year — $10.00

( ) New ( ) Renewal

MAIL MEMBERSHIP TO:
EVELYN RICHARDS
411 N. Wilbur Ave., Sayre, Pa. 18840

For membership make checks payable to IBS.

PRECISION SHOOTING SUBSCRIPTION

( ) Precision Shooting, one year — $6.00

( ) Precision Shooting, two years — $11.00

( ) Precision Shooting, outside U.S. & Canada — $7.00 each year

( ) New ( ) Renewal

MAIL PRECISION SHOOTING MAGAZINE SUBSCRIPTION TO:
PRECISION SHOOTING
Box 6, Athens, Pa. 18810

For subscription ONLY make checks payable to Precision Shooting.

Official IBS Varmint & Heavy Bench Rifle Match Schedule 1978

June 10-11	South Creek	HV,LV,HB(5 shot)
June 17-18	Pine Tree	HV, LV, NY State Championship
June 24-25	Council Cup	HV, LV, HB
July 1-2	South Creek	HV, LV PA State Championship
July 8	Fairfax	LV for score
July 9	Fairfax	HV for score
July 14-16	Mainville	300-100-200 HV, LV, BR
July 29-30	Camillus	HV, LV
August 5 & 6	Mainville	200-300 yard Championships HV, LV, BR
August 12-13	Stittsville	HB, International 100 & 200 Championship + Registered HV & SP
August 24-27	Council Cup	HV, LV, SP, International Varmint Championship
September 9-10	Englishtown	HV, LV, NJ State Championship 100 yards only, 9:00 a.m.
September 23-24	Pine Tree	HV, LV, HB (5 shot)

Official IBS Hunter Match Schedule 1978

June 4	Mainville	HTR & Varmint for score	Noon
June 10	E.B.S.A.,	100 yd.	5:00 p.m.
June 18	York (IWLA)	200 yd. + Varmint for score	Noon
June 24	Saginaw	100 yard	Noon
June 25	Sulphyr Springs	HTR & Varmint for score	Noon
July 8	E.B.S.A.	100 yd.	5:00 p.m.
July 9	Mainville	200 yd.	Noon
July 23	York (IWLA)	100 yd. York County Championship	
July 29	Saginaw	100 yard	Noon
July 30	Sulphyr Springs	HTR & Varmint for score	Noon
August 6	Central Penn	100 yd.	
August 12	Englishtown	100 yd. NJ Championship	3:00 p.m.
August 19-20	York (IWLA)	100 — 200 yd. + HV score Championship	
August 20	Capital City	R & P 200 yd. Maine Championship	
August 27	Central Penn	100 yd.	
September 3	Mainville	200 yd. & Varmint for score	Noon
September 9	E.B.S.A.	100 yd.	5:00 p.m.
September 10	York (IWLA)	100 yd. & Varmint for score	Noon
September 16-17	Mainville	International Championship 100 & 200 yd.	
September 17	Capital City	R & P 100 yds., Maine Championship	
September 23	Saginaw	100 yd.	Noon
September 24	Central Penn	100 yd.	
October 1	Sulphyr Springs	100 yd. & Varmint for score	Noon
October 8	Mainville	100 yd.	Noon
October 14	E.B.S.A.	100 yd.	5:00 p.m.
October 15	York (IWLA)	100 yd.	Noon
October 29	Central Penn	100 yd.	Noon
November 5	Mainville	100 yd.	Noon